BLUE DIAMOND ATTACHMENTS

BUILT STRONG.
ATTACHED FOR LIFE.

# MINI ATTACHMENT BROCHURE



BLUEDIAMONDATTACHMENTS.COM



# MINI BRUSH CUTTERS

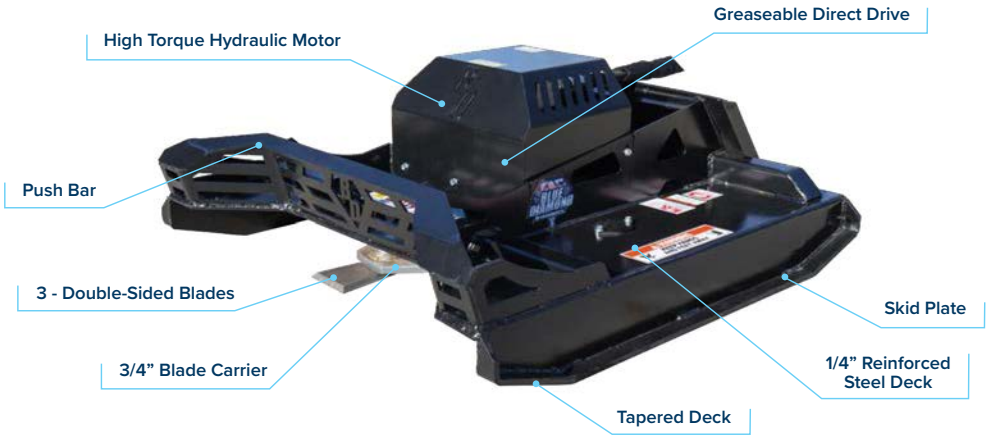


## MINI OPEN FRONT

**42"** CUTTING WIDTH

**4"** CUTTING DIAMETER

**11-20** GPM FLOW



THREE DOUBLE-SIDED BLADES ON A 3/4" THICK BLADE CARRIER



OPEN FRONT EXPOSES 2 1/4" OF CUTTING BLADES

## MINI CLOSED FRONT

**36" / 42" / 50"** CUTTING WIDTH

**4"** CUTTING DIAMETER

**11-20** GPM FLOW



THREE DOUBLE-SIDED BLADES ON A 3/4" THICK BLADE CARRIER



FRONT AND REAR CHAIN GUARDS

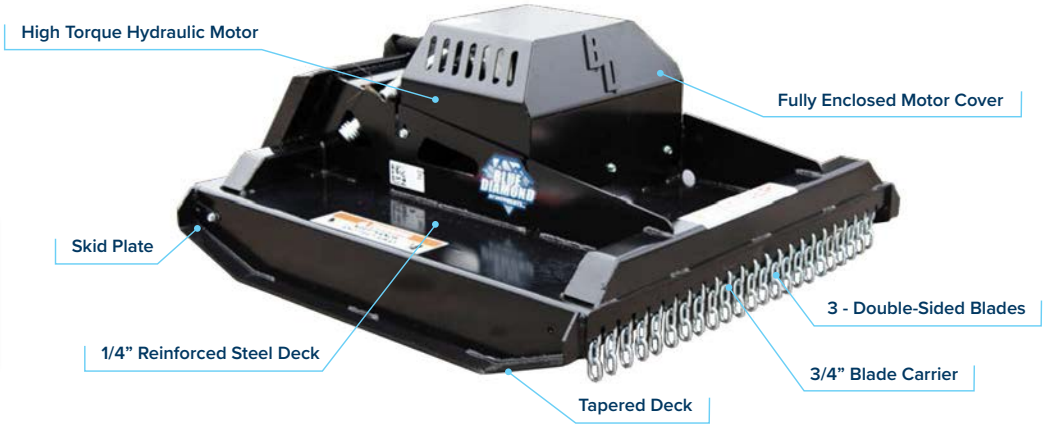




## KEY FEATURES

- 3 double-sided blades
- 4" cutting capacity
- Direct drive with lifetime warranty on the spindle
- Bi-directional cutting
- Flow range: 11-20 GPM
- Open front design for more aggressive cutting and Closed front design with chain guards



# MINI BROOMS

## ANGLE BROOM

**48” / 60”** WORKING WIDTH
**26”** BRISTLES DIAMETER
**12** MAX GPM FLOW
**3,600** MINIMUM PSI


WATER KIT AVAILABLE




**KEY FEATURES:**
Steel, poly, or poly-steel bristles available • Mini Universal & Bobcat MT mounts




## PICKUP BROOM

**42” / 54”** WORKING WIDTH
**18”** BRISTLES DIAMETER
**8-20** MAX GPM FLOW
**3,600** MINIMUM PSI


BOLT-ON RUBBER SKIRTING

**KEY FEATURES:**
Bolt-on rubber skirting • Mini Universal, Bobcat MT, & Avant mounts

## PUSH BROOM

**60” / 72” / 96”** WORKING WIDTH
**11** BRUSH ROWS
**27”** BROOM DEPTH*
**12”** BROOM HEIGHT*


11” TALL BRISTLES

*Depth and height is without the mount.

**KEY FEATURES:**
Push or pull operation • Mini Universal mount

MAGNET PICKUP BAR KIT AVAILABLE

BOBCAT MT MOUNT AVAILABLE ON 60”





# MINI GRAPPLES

## ROOT GRAPPLE



MINI UNIVERSAL AND BOBCAT MT MOUNTS AVAILABLE



PROTECTED CYLINDERS

| | |
|---|---|
| 36"/42"/44"/50" | WORKING WIDTH |
| 28" | OPENING HEIGHT |
| 5/16" | TOP TINE THICKNESS |

**KEY FEATURES:**
Single or dual hydraulic clamps • for machines up to 50 HP

## ROCK BUCKET GRAPPLE



3" TINE SPACING




MINI UNIVERSAL MOUNT AVAILABLE

| | |
|---|---|
| 42"/48" | WORKING WIDTH |
| 22" | OPENING HEIGHT |
| 3/8" | TOP TINE THICKNESS |

**KEY FEATURES:**
Single hydraulic clamp • for machines up to 50 HP

## LOG GRAPPLE



MINI UNIVERSAL AND BOBCAT MT MOUNTS AVAILABLE



SERRATED CLAMPS

| | |
|---|---|
| 63" | MAXIMUM OPENING |
| 4" | MINIMUM CLOSED |
| 2,000lb | LOAD CAPACITY |

**KEY FEATURES:**
Manual or hydraulic rotation • serrated grapple tines & stabilization brace

## GRAPPLE RAKE



HEAVY DUTY HYDRAULIC CYLINDERS



MINI UNIVERSAL AND BOBCAT MT MOUNTS AVAILABLE

| | |
|---|---|
| 42"/48" | WORKING WIDTH |
| 32-1/2" | OPENING HEIGHT |
| 3/8" | TOP TINE THICKNESS |

**KEY FEATURES:**
Solid back frame design • serrated bottom tines • for machines up to 45 HP



## GRAPPLE FORK



1/2" SERRATED SIDE PLATES ON GRAPPLE ARM



MINI UNIVERSAL AND BOBCAT MT MOUNTS AVAILABLE

| | |
|---|---|
| 36"/42" | TINE LENGTH |
| 47" | OPENING HEIGHT |
| 4" | GRAPPLE ARM WIDTH |
| 3,000lb | LIFT CAPACITY |

**KEY FEATURES:**
36" reinforced top grapple • adjustable tines • for machines up to 45 HP



# MINI AUGERS

## EXTREME DUTY MINI AUGER

**EX1 to EX4** MODEL NUMBER
**2" HEX** OUTPUT SHAFT
**8-23** GPM FLOW

### AUGER BITS



Heavy Duty Bits | Heavy Duty Bits w/Cast Heads | Rock Bits | Tree Bits

*Auger bits, auger extensions, and adapters are available to suit different ground conditions and drilling applications*

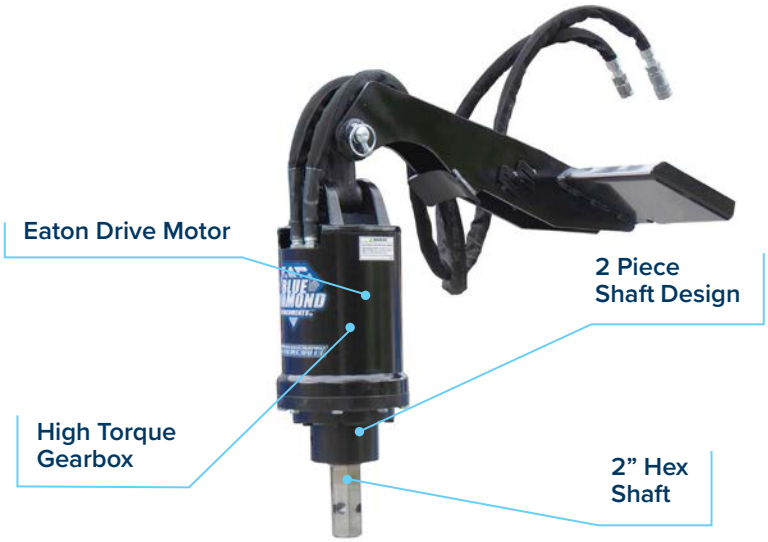


## MS1 & MS2 MINI AUGER

**2- or 4-way** SWING OPTIONS
**2" HEX** OUTPUT SHAFT
**6-16** GPM FLOW



**KEY FEATURES:**
Design for machines with less than 20 HP • Mini Universal Mount

## KEY FEATURES

- Compact high torque manufactured gearbox
- 2 piece shaft design ensuring maximum side load ratings
- 5-year gearbox warranty, 3-year motor warranty, and lifetime shaft pull-out warranty, 1-year mount and workmanship warranty
- Universal mini skid steer and Bobcat MT mounts with welded cradle and dual-pin design for natural hanging and stable drilling
- Hoses and couplers included



# MINI BREAKERS

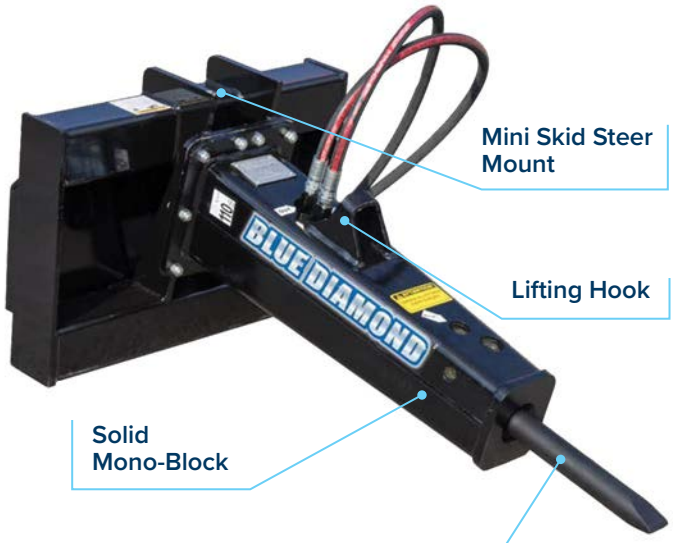


Mini Skid Steer Mount

Lifting Hook

Solid Mono-Block

Chisel, Moil, Blunt, and Pyramid Tools Available for Different Ground Conditions

## MINI HYDRAULIC BREAKER

**1,500lb to 9,900lb** CARRIER WEIGHT

**200-900** FT/LB ENERGY CLASS

**7-16** GPM FLOW (MAX)

*Backed by an industry-leading 3-year warranty, plus a 10-year warranty on the mono-block core*

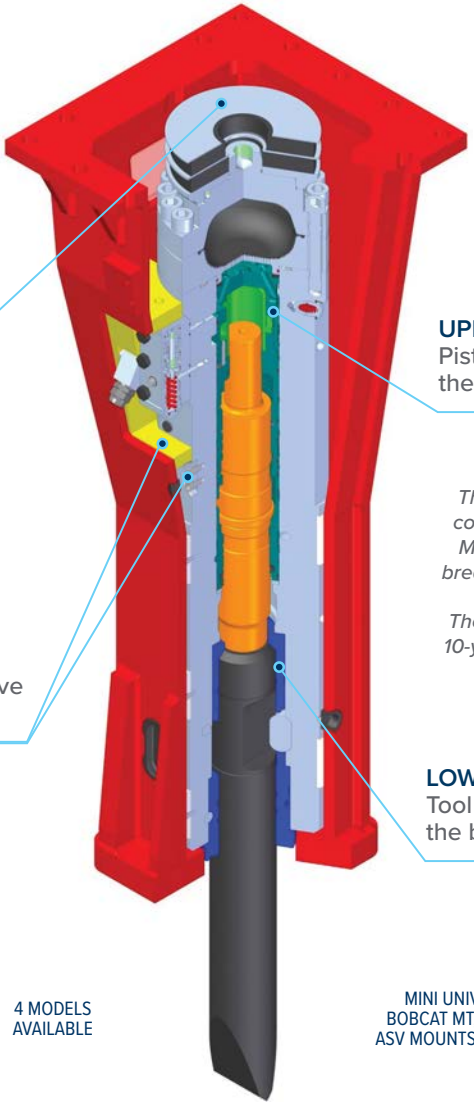

**BUFFER:** Avoids vibrations to host machine

**UPPER BUSHINGS:** Piston slides inside the bushings

*The bushings avoid contact between the Monoblock and the breakers moving parts.*

*The Monoblock has a 10-year warranty since there is no wear*

**QUIET:** All possible noise release points have been sealed

**LOWER BUSHINGS:** Tool slides inside the bushings

4 MODELS AVAILABLE

MINI UNIVERSAL, BOBCAT MT, AVANT, & ASV MOUNTS AVAILABLE




## KEY FEATURES

- **Solid mono-block housing eliminates tie rods for increased durability and reduced maintenance**
- **Only two internal moving parts simplify service and improve long-term reliability**
- **No nitrogen re-gassing required, reducing maintenance and downtime**
- **Anti-blank firing system protects internal components from dry firing damage**
- **Backed by an industry-leading 3-year warranty, plus a 10-year warranty on the mono-block core**

### BREAKER TOOLS



PYRAMID | BLUNT | CHISEL | MOIL



# MINI BUCKETS

## 4-IN-1

OPTIONAL BOLT-ON FRONT CUTTING EDGE





TWO 2" X 6" HYDRAULIC CYLINDERS

**42"/48"** | WORKING WIDTH
**30-7/16"** | OPENING HEIGHT
**Tooth & Smooth** | CUTTING EDGE

**KEY FEATURES:**
Mini Universal & Bobcat MT mounts • 1/4" thick sides

## SNOW & MULCH BUCKET





REINFORCED BACK & FRAME

**36" to 60"** | WORKING WIDTH
**30-1/2"** | BUCKET DEPTH
**3/16"** | SIDES & WRAP THICKNESS

**KEY FEATURES:**
Pre-drilled for bolt-on edge • 1/2" wear bars

## LOW PROFILE BUCKET





PUNCHED FOR BOLT-ON EDGE

**32" to 60"** | WORKING WIDTH
**15" or 20"** | BACK HEIGHT
**Tooth & Smooth** | CUTTING EDGE

**KEY FEATURES:**
3/8" bottom wear bars • for machines under 45 HP

## DISPENSING BUCKET





18" BOLT-ON CHUTE

**1/2yd** | BUCKET CAPACITY

**KEY FEATURES:**
Hydraulic door/gate • splash guard around top lip • Mini Universal mount

## ROCK BUCKET



2-1/4" TINE SPACING

**36"/42"/48"/50"** | WORKING WIDTH
**3/8"** | TINE THICKNESS
**23-3/4"** | BUCKET DEPTH

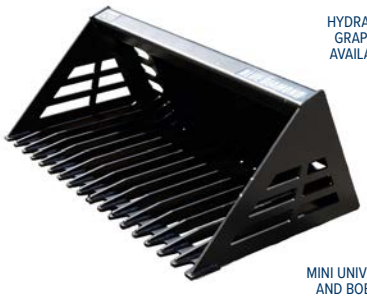

HYDRAULIC GRAPPLE AVAILABLE

MINI UNIVERSAL AND BOBCAT MT MOUNTS AVAILABLE

**KEY FEATURES:**
Webbed front edge for raking or grading • mounts to most mini machines

## FRONT DUMP BUCKET





2" X 6" CYLINDER

**36"/44"/50"** | WORKING WIDTH
**43"** | ADDITIONAL REACH
**5.89 to 8.60 cu ft** | BUCKET CAPACITY

**KEY FEATURES:**
Mini Universal mount • 1/2" x 4" steel cutting edge



## STUMP BUCKET





SERRATED EDGES

**42"** | OVERALL LENGTH
**1/4"** | BOTTOM PLATE THICKNESS
**3** | REPLACEABLE TEETH

**KEY FEATURES:**
Mini Universal & Bobcat MT mounts • 3/4" thick sides



# MINI FORKS

## HYDRAULIC PALLET FORK

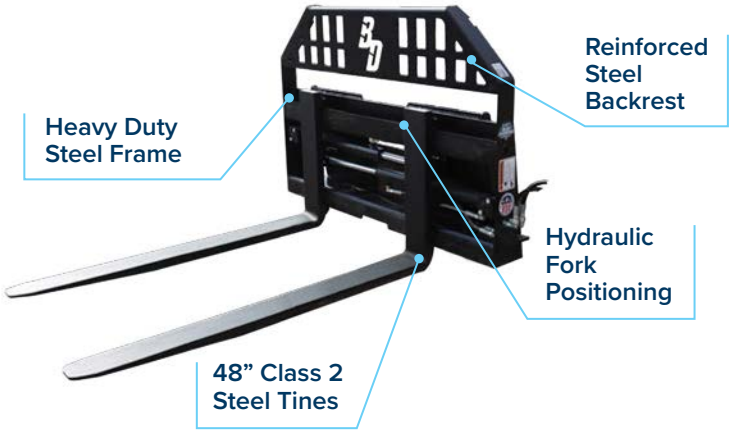




DUAL HYDRAULIC CYLINDERS

**48"** TINE LENGTHS

**4,000lb** LIFTING CAPACITY

**KEY FEATURES:**
Hydraulically adjusts from 8" to 40" on center • Mini Universal & Bobcat MT mounts

## MINI PALLET FORK

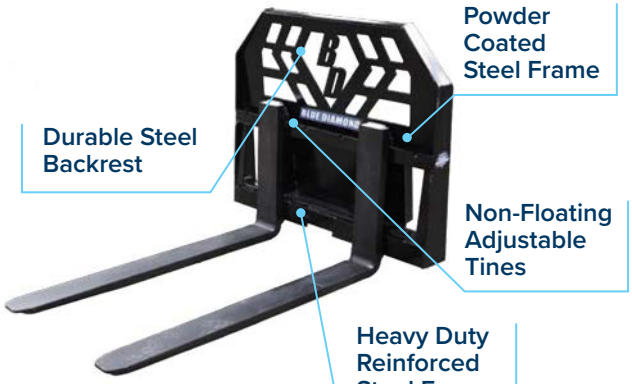




ADJUSTABLE TINES

**36" / 42" / 48"** TINE LENGTHS

**3,000lb** LIFTING CAPACITY

**KEY FEATURES:**
Durable steel backrest adds strength • Mini Universal & Bobcat MT mounts



## MINI NURSERY FORK

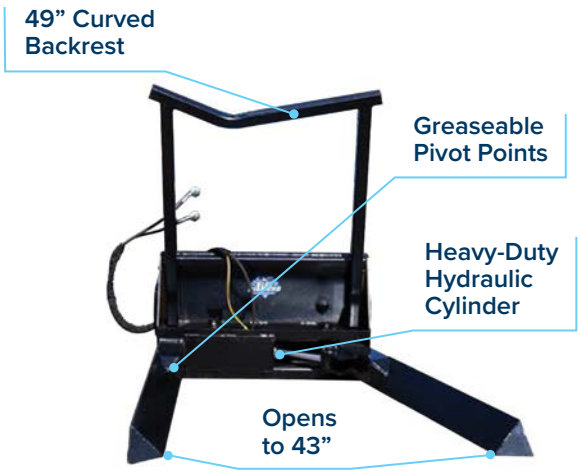




49" CURVED BACKREST

**45"** TINE LENGTHS

**2,000lb** LIFTING CAPACITY

**KEY FEATURES:**
3" min closing width • 36" overall width • Mini Universal & Bobcat MT mounts

## MINI LOW PROFILE PALLET FORK

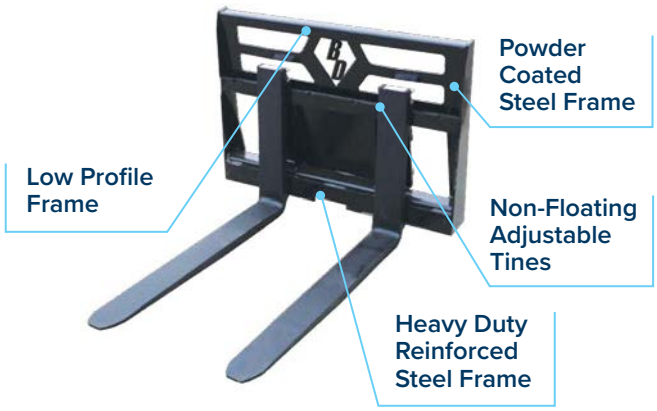




ADJUSTABLE TINES

**36" / 42" / 48"** TINE LENGTHS

**3,000lb** LIFTING CAPACITY

**KEY FEATURES:**
Mini Universal, Bobcat MT, Avant, & ASV/RT30 mounts available



# LAND PREPARATION & SITE MAINTENANCE

## MINI HEAVY DUTY POWER RAKE





HEAVY DUTY PROTECTED BEARINGS

FIXED OR REPLACEABLE CARBIDE TEETH | MANUAL OR FIXED ANGLE MODELS AVAILABLE | MINI UNIVERSAL AND BOBCAT MT MOUNTS AVAILABLE

**40"/60"/72"** WORKING WIDTH
**7"** DRUM DIAMETER
**15-24** GPM FLOW

**KEY FEATURES:**
Flip-up airless wheels with 7/8" greaseable axles • optional reversible side shields

## MINI STANDARD DUTY POWER RAKE



FLIP-UP NO-FLAT AIRLESS WHEELS



**48"** WORKING WIDTH
**7"** DRUM DIAMETER
**10-20** GPM FLOW

FIXED CARBIDE TEETH | MANUAL OR FIXED ANGLE MODELS AVAILABLE

**KEY FEATURES:**
Heavy duty protected bearings • Mini Universal & Bobcat MT mount options

## MINI LAND PLANE



FOUR 4" X 1/2" CUTTING EDGES



1/2" THICK X 4" WIDE CUTTING EDGE

**49"** WORKING WIDTH
**1/2"** FRAME THICKNESS
**3" x 3"** TUBE FRAME THICKNESS

**KEY FEATURES:**
Grades and levels in foward and reverse • Mini Universal and Bobcat MT mounts

## MINI SOD ROLLER



MINI UNIVERSAL AND BOBCAT MT MOUNTS AVAILABLE



PULLOUT PINS FOR ADJUSTABLE ROLL OPTION

**42"/50"** FIXED ROLL WIDTH
**36" - 48"** ADJUSTABLE ROLL WIDTH
**32" & 40"** ARM WIDTH

**KEY FEATURES:**
Fixed and adjustable roll width options • works in forward and reverse

## MINI ROTOTILLER



MINI UNIVERSAL AND BOBCAT MT MOUNTS AVAILABLE



DOUBLE-EDGE REPLACEABLE TINES

**48"/56"** TILLING WIDTH
**6"** TILLING DEPTH
**12** MIN GPM FLOW

**KEY FEATURES:**
Bi-directional • protected 315CC direct drive motor with HD bearing nose cone





# LAND PREPARATION & SITE MAINTENANCE

## MINI STUMP GRINDER

MINI UNIVERSAL AND BOBCAT MT MOUNTS AVAILABLE





DUAL DIRECTION CUTTING WITH GREENTEETH 900 CARBIDE TEETH ON BOTH SIDES

| | |
|---|---|
| 24" | WHEEL SIZE |
| 1" | WHEEL THICKNESS |
| 16-20 | GPM FLOW |

**KEY FEATURES:**
Built-in cushioning to reduce overload • easy tooth rotation • debris shield

## MINI POST DRIVER

MINI UNIVERSAL AND BOBCAT MT MOUNTS AVAILABLE





OPTIONAL TILT FUNCTION TO GET POST STRAIGHT ON SLOPES

| | |
|---|---|
| 4" to 12" | POST ADAPTERS |
| 7-26 | MAX PSI |
| 7-26 | GPM FLOW |

**KEY FEATURES:**
Enclosed heavy-duty steel housing with isolated vibration assembly

## MINI TREE BOOM

MINI UNIVERSAL AND BOBCAT MT MOUNTS AVAILABLE





3" X 3" SQUARE ARM

| | |
|---|---|
| 2,500lb | LIFT CAPACITY |
| 60" | TOTAL HEIGHT |
| 40" & 48" | EXTENDS REACH |

**KEY FEATURES:**
Made from heavy structural square tube • hole for chain or strap to mount





# LAND PREPARATION & SITE MAINTENANCE

## MINI TRENCHER



MINI UNIVERSAL (FIXED) AND BOBCAT MT (SIDE-SHIFT) MOUNTS AVAILABLE



SPOIL AUGER MOVES SOIL AWAY FROM TRENCH

**up to 36"** CUTTING DEPTHS
**4"/6"/8"** CUTTING WIDTHS
**10-25** GPM FLOW

**KEY FEATURES:**
Dirt, combo, and rock chain styles • adjustable skid foot • self-adjusting crumber

## MINI HEAVY DUTY TRENCHER

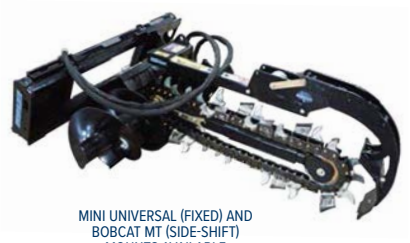

MINI UNIVERSAL (FIXED) AND BOBCAT MT (SIDE-SHIFT) MOUNTS AVAILABLE



SELF-ADJUSTING CRUMBER

**up to 36"** CUTTING DEPTHS
**4"/6"/8"** CUTTING WIDTHS
**13-25** GPM FLOW

**KEY FEATURES:**
Dirt, combo, and rock chain styles • adjustable skid foot • spoil auger to move dirt

## MINI BACKHOE



MINI UNIVERSAL AND BOBCAT MT MOUNTS AVAILABLE



2" X 10" PROTECTED HYDRAULIC CYLINDER

**42" & 48"** ARM LENGTHS
**8"/10"/12"** BUCKET OPTIONS
**under 45 HP** HOST MACHINES

**KEY FEATURES:**
Optimized bucket pivot linkage increases bucket rotation • greaseable pivot points




## MINI SNOW PUSHER



MINI UNIVERSAL MOUNT AVAILABLE



BOLT-ON REPLACEABLE WEAR SHOES

**48"/60"** WORKING WIDTH
**1-1/2"** CUTTING EDGE
**1/4"** SIDE PLATE THICKNESS

**KEY FEATURES:**
Optional pull-back kit and poly wear shoes available • rugged steel frame

## MINI MULTI-PURPOSE BLADE



MINI UNIVERSAL AND BOBCAT MT MOUNTS AVAILABLE



HYDRAULIC ANGLE KIT AVAILABLE, BLADE TILTS UP TO 10° AND ANGLES UP TO 30°

**48"/60"** WORKING WIDTH
**22"** BLADE HEIGHT
**10-guage** MOLDBOARD THICKNESS

**KEY FEATURES:**
Skid shoes • replaceable 1/2" steel cutting edge • trip-lockout pin for dirt

# PARTS & ACCESSORIES WHEN YOU NEED THEM



SAFETY WINDOWS



AUGER BITS



BREAKER TOOLS



PALLET FORK TINES



BLADE KITS



BROOM WAFERS



WIRE HARNESSES

# IN STOCK & READY TO SHIP

**Two convenient ways to order at BDAPARTS.COM or SmartEquip**

---

Blue Diamond® Attachments is a U.S.-based, family-owned manufacturer that specializes in high-performance attachments for compact equipment used in construction, agriculture, landscaping, and municipal operations. The company offers a full line of brush cutters and complementary attachments designed for skid steers, mini skid steers, excavators, and tractors.

Scan to request a quote

BUILT STRONG. ATTACHED FOR LIFE.

**4512 Anderson Road | Knoxville, TN 37918**
**ph 888-376-7027 | fax 865-246-2007**
**info@bluediamondattachments.com**

Scan to visit *bluediamondattachments.com*

*© 2026 Blue Diamond® Attachments. All Rights Reserved. 011/09/2026*

Revised: 11/10/26