SNOW BROCHURE



BLUE DIAMOND ATTACHMENTS

BUILT STRONG.
ATTACHED FOR LIFE.

BLUEDIAMONDATTACHMENTS.COM



SNOW PUSHERS

HEAVY DUTY

Blue Diamond® Heavy Duty Snow Pushers are built tough to move more snow, clear wider paths, and keep you working through the harshest winter conditions.

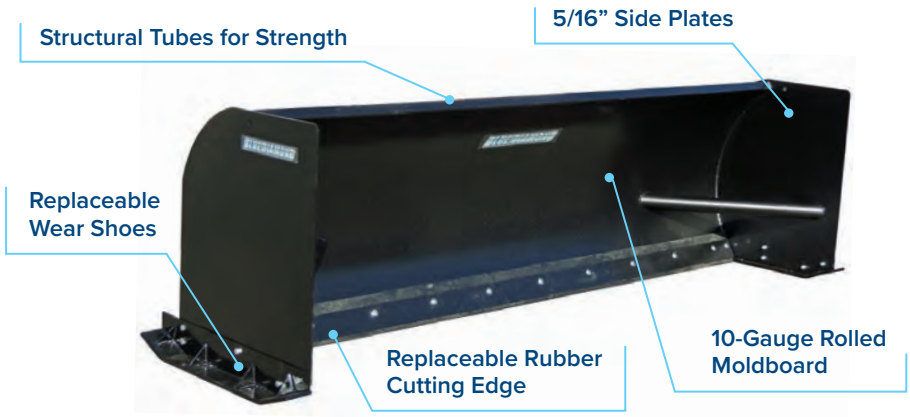

96” & 120” WORKING WIDTH
27” BLADE DEPTH
35” MOLDBOARD HEIGHT


1-1/2” Rubber cutting edge


Replaceable 3/4” wear shoes


Pull back option available

KEY FEATURES

- Adjustable rubber cutting edge
- Bolt-on wear shoes
- Reinforced steel rolled moldboard
- Heavy duty side plates
- Pull-back option available
- 48” & 60” models for Mini Skid Steers

STANDARD DUTY

Blue Diamond® Standard Duty Snow Pushers deliver dependable snow removal, rugged performance, and efficient clearing for everyday winter conditions.

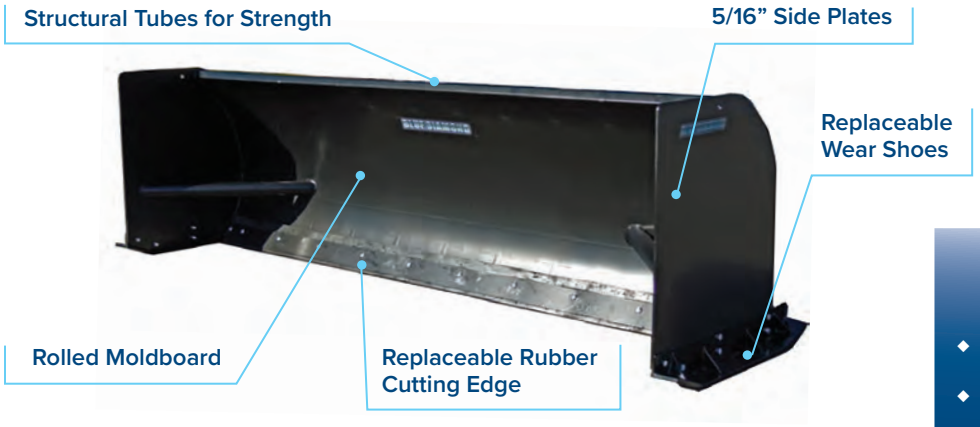

72” & 96” WORKING WIDTH
27” BLADE DEPTH
35” MOLDBOARD HEIGHT


Rubber cutting edge


Bolt-on wear shoes


Pull back option available

KEY FEATURES

- Adjustable rubber cutting edge
- Bolt-on wear shoes
- Reinforced steel rolled moldboard
- Heavy duty side plates
- Pull-back option available
- 48” & 60” models for Mini Skid Steers

888-376-7027 BlueDiamondAttachments.com



ANGLE BROOMS

SEVERE DUTY ANGLE BROOM

The **Blue Diamond® Series 2 Severe Duty Angle Broom** is a brutal attachment for the serious user. From front to back, it has been engineered for daily use in tough conditions. Everywhere you look on this broom, you will see quality and ingenuity.

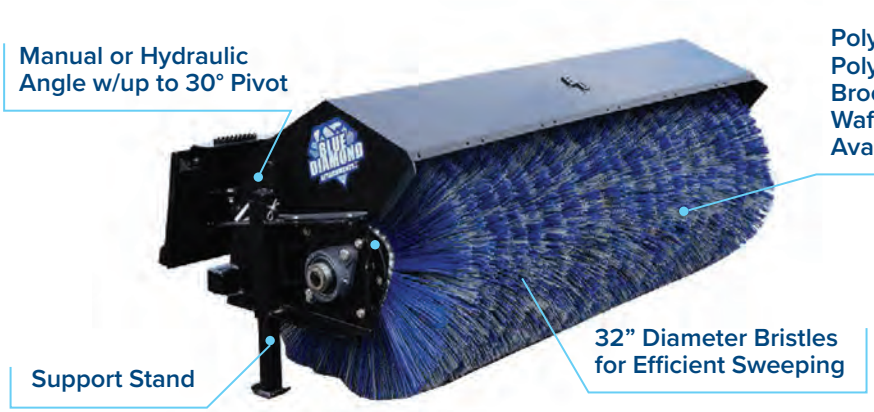

84” & 96” WORKING WIDTH
32” BRISTLE DIAMETER
30° PIVOT ANGLE


Grease fittings on pivot points


Retractable stand to protect bristles during storage


Optional water kit available

KEY FEATURES

- **Manual or hydraulic angle with up to 30° pivot angle**
- **32” poly or poly-steel wafer options**
- **Retractable stand protects bristles during storage**
- **Bi-directional motor**
- **Oversized main shaft spindles & bearings**
- **48” & 60” models for Mini Skid Steers**

HEAVY DUTY ANGLE BROOM

The **Blue Diamond® Heavy Duty Angle Broom** is built for powerful sweeping performance in the toughest conditions. Designed for skid steers, mini skid steers, and tractor, this broom makes quick work of snow removal driveways, and parking lots.

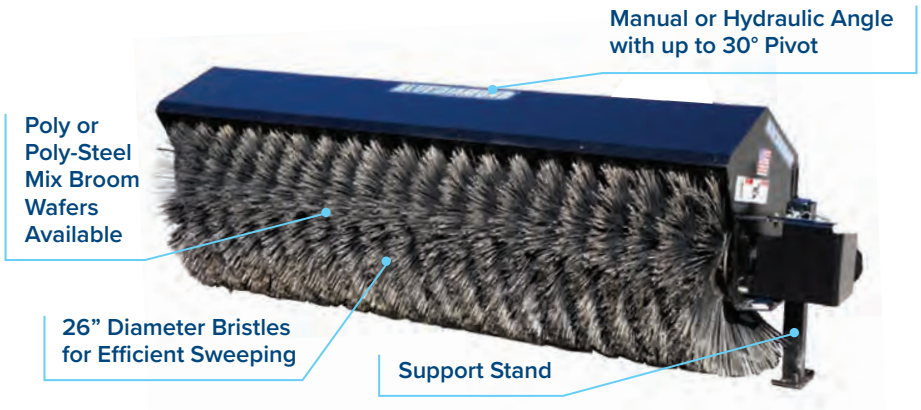

36” to 96” WORKING WIDTH
26” BRISTLE DIAMETER
30° PIVOT ANGLE


Rubber debris deflector option available


Retractable stand to protect bristles during storage

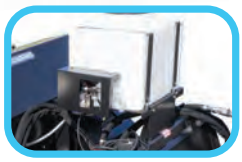
Optional 25-gallon water kit available

KEY FEATURES

- **Manual or hydraulic angle with up to 30° pivot angle**
- **26” poly or poly-steel wafer options**
- **Retractable stand protects bristles during storage**
- **Optional 25-gallon water kit for dust control**
- **48” & 60” models for Mini Skid Steers**

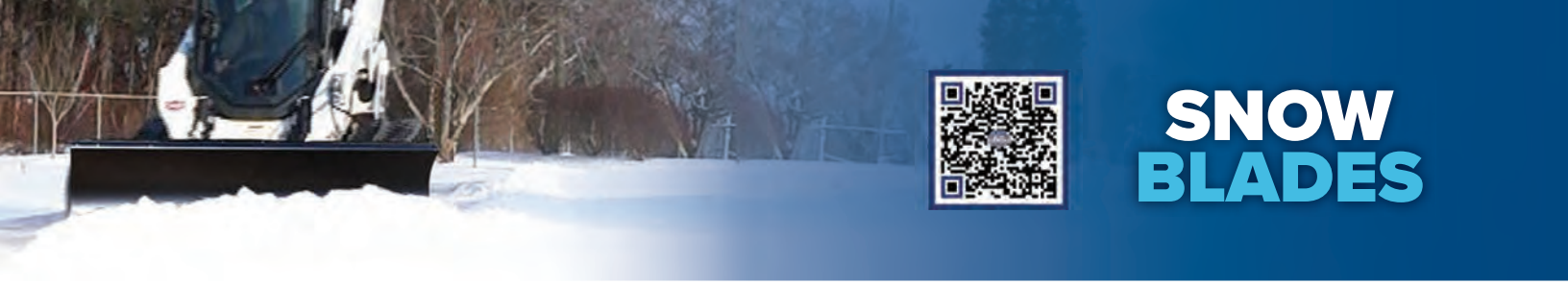

SNOW BLADES

6-WAY DOZER BLADE

Move snow with precision and power using the **Blue Diamond® 6-Way Dozer Blade,** featuring heavy-duty construction, versatile 6-way adjustments, and multiple width options.

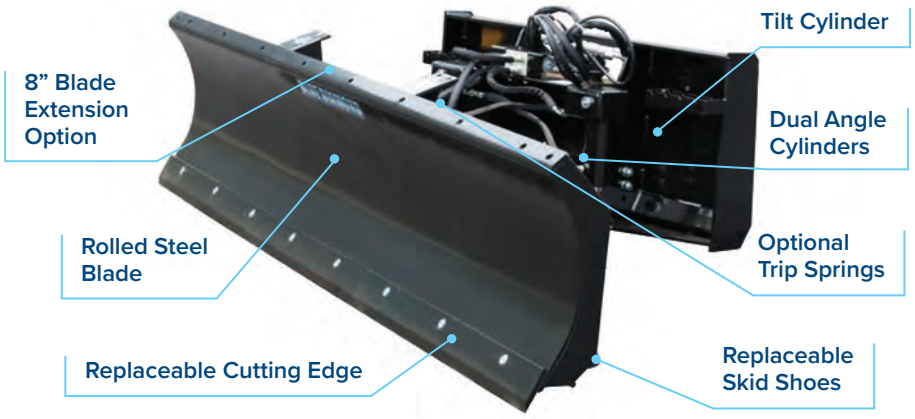

72"/84"/96" WORKING WIDTH
62" - 83" MAX WIDTH ANGLE
22" BLADE HEIGHT


Steel cutting edge


Heavy duty cylinders


Adjustable & replaceable skid plates shoes

KEY FEATURES

- **6-Way Adjustment: Tilt, angle, and lift in multiple directions**
- **Reinforced steel moldboard and frame**
- **Added protection on electrical and hydraulic valve components**
- **Optional 8" blade height extension and trip springs**
- **Replaceable skid shoes and bolt-on edge**

V-BLADE SNOW PLOW

The **Blue Diamond® V-Blade Snow Plow** is designed for snow, dirt, and material management. It offers flexible blade positions, rugged construction, and easy operation.

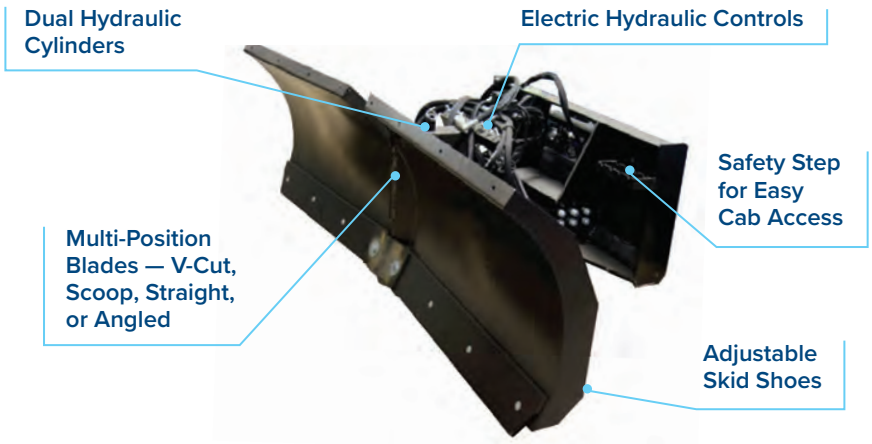

72"/84"/96"/108" WORKING WIDTH
up to 30° BLADE ANGLE
64" to 95" ANGLE WIDTH


Steel cutting edge


Trip springs


Adjustable depth guides on skid shoes

KEY FEATURES

- **Multi-position blades – V-cut, scoop, straight, or angled**
- **Optional float kit lets tilt up to 10° up or down**
- **Dual hydraulic cylinders with electro-hydraulic cab controls**
- **Replaceable steel cutting edge**
- **Adjustable depth guides to control blade height**
- **48" & 60" models for Mini Skid Steers**

888-376-7027 BlueDiamondAttachments.com



MULTI-PURPOSE BLADES

HEAVY DUTY

Handle snow, dirt, and grading tasks with precision using the **Blue Diamond® Heavy Duty Series 2 Multi-Purpose Blade.** Engineered for performance and durability on skid steers 50 HP and above.

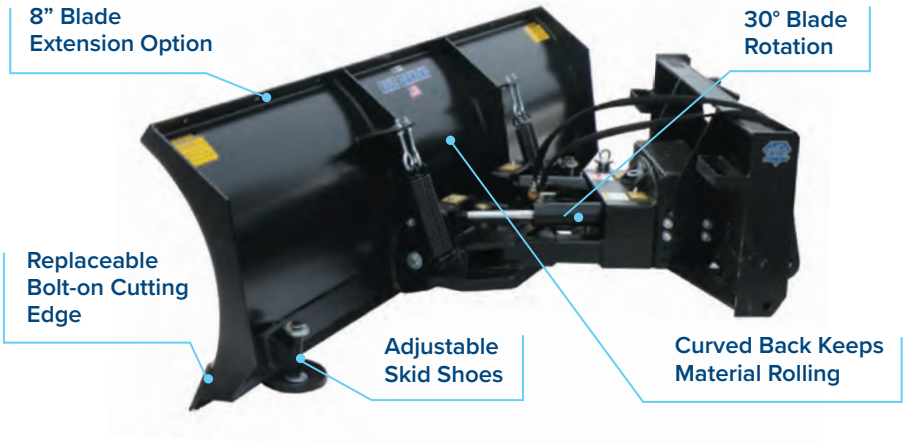

84”/96”/108”/120” WORKING WIDTH
28” BLADE HEIGHT
30° BLADE ROTATION


Replaceable cutting edge


Dual angle cylinders


Adjustable skid shoes

KEY FEATURES

- Rolled steel blade and reinforced frame
- Full-trip moldboard
- Replaceable, reversable steel cutting edge
- Adjustable skid shoes
- Optional bolt-on height extension and float kit
- Dual hydraulic angle cylinders

STANDARD DUTY

The **Blue Diamond® Standard Duty Series 2 Multi-Blade** delivers dependable performance for snow removal and light dirt work on skid steers under 50 HP.

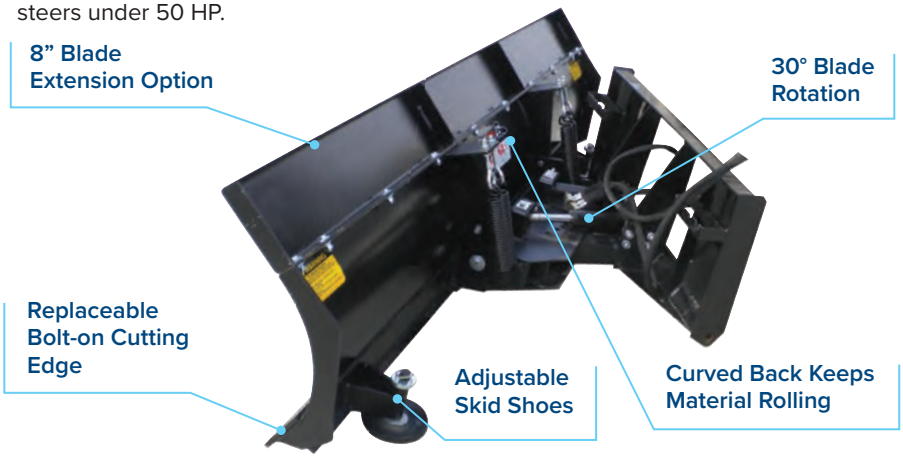

60”/72”/84” WORKING WIDTH
22” BLADE HEIGHT
30° BLADE ROTATION


Replaceable cutting edge


Dual angle cylinders


Adjustable skid shoes

KEY FEATURES

- Rolled steel blade and full-trip moldboard
- Replaceable, reversable steel cutting edge
- Adjustable skid shoes
- Optional bolt-on height extension
- Dual hydraulic angle cylinders
- Mini 48” & 60” models available



SNOW BUCKETS

HEAVY DUTY

Blue Diamond® Heavy Duty Snow & Mulch Bucket deliver rugged durability and versatile performance for moving snow, mulch, and bulk materials with ease.

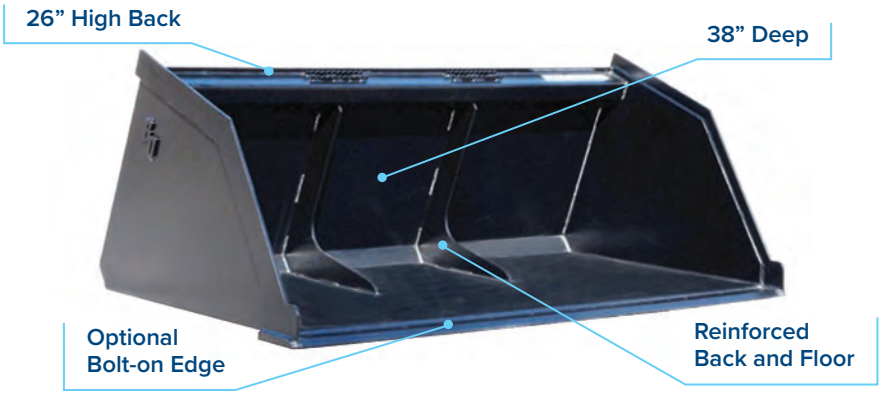

60” to 102” WORKING-WIDTH
26” BUCKET HEIGHT
38” BUCKET DEPTH

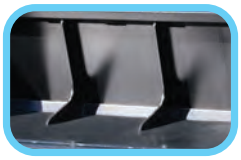
Gussets tie the floor to the back of the bucket


Pre-drilled for optional bolt-on edge


Safety steps for cab access

KEY FEATURES

- **Multiple width options**
- **Reinforced ¼ wrap on back and floor for durability**
- **Gussets tie the floor to the 1/4 bucket wrap for added strength**
- **Pre-drilled for optional bolt-on cutting edge**
- **21-36 cu. ft. struck capacity**

HIGH-CAPACITY / HIGH-BACK

Blue Diamond® High Back Snow & Mulch Bucket move more material with added capacity, excellent visibility, and dependable durability.

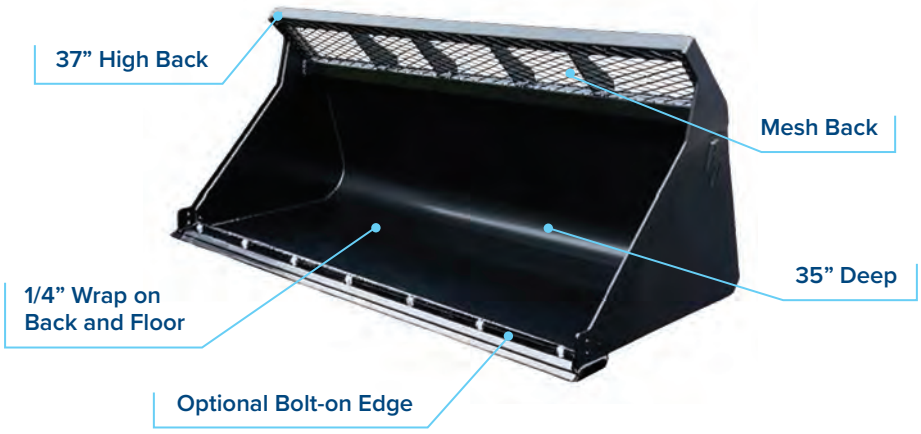

72” to 96” WORKING WIDTH
37” BUCKET HEIGHT
35” BUCKET DEPTH


1/4” side plates


10” mesh extention for increased visibility

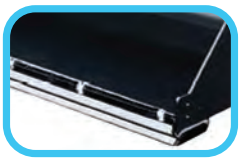
Bolt-on edge and side cutters option

KEY FEATURES

- **Five width options**
- **Mesh in back for increased visibility**
- **Tooth or smooth bolt-on edge**
- **Pre-drilled for bolt-on cutting edge and side cutters**
- **30-40 cu. ft. struck capacity**
- **Ribs inside to strengthen floor and back**

888-376-7027 BlueDiamondAttachments.com



SNOW PLOW & MATERIAL SPREADER

AUTOWING SNOW PLOW

Move snow effortlessly with the **Blue Diamond® Autowing Snow Plow,** featuring self-adjusting wings that combine the simplicity of a straight blade with the power of a winged design.

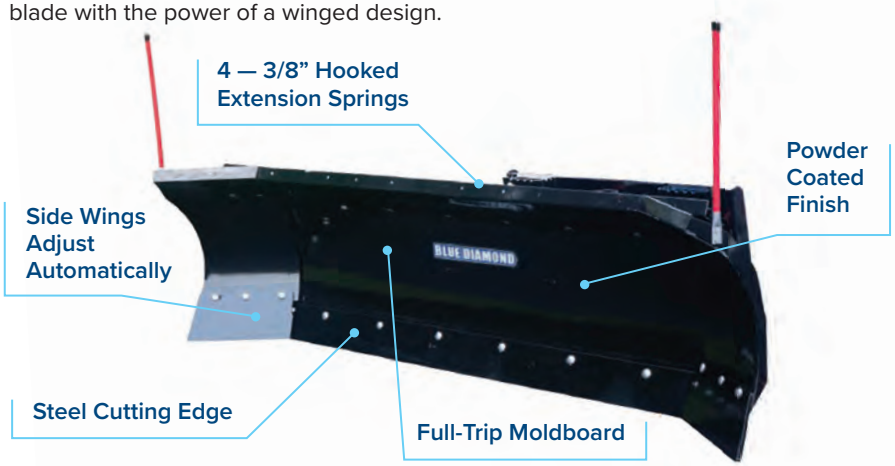

103" WORKING WIDTH
29" BLADE HEIGHT
25° PIVOT ANGLE

KEY FEATURES

- Spring-loaded wings give and retract when encountering obstacles
- Replaceable 6" carbon steel cutting edges on full-trip moldboard and wings
- 6" steel cutting edge
- 6° oscillation follows changing ground contours
- Steel base channel and formed torque box with four welded vertical reinforcement ribs


6" steel cutting edge


Adjustable plow shoes


Dual hydraulic cylinders

MATERIAL SPREADER

The **Blue Diamond® Heavy Duty Material Spreader** is an essential skid steer attachment for efficiently spreading salt, sand, or fertilizer.



8 & 18 cu. ft. HOPPER CAPACITY
up to 30' SPREADING WIDTH
10-20 GPM HOST MACHINE

KEY FEATURES

- 8 or 18 cu. ft. hoppers
- Self-loading design
- Scoop, carry, and spread material with one attachment
- Hardened Steel cutting edge
- Protective Grate to prevent clogging
- Adjustable flow with a manually operated gate
- Steel agitator and spreader


Sidewalk deflector kit option available


Safety steps


Replaceable bolt-on paddles

Quality PARTS & ACCESSORIES EST. 1995 BLUE DIAMOND ATTACHMENTS

PARTS & ACCESSORIES WHEN YOU NEED THEM



SAFETY WINDOWS



AUGER BITS



BREAKER TOOLS

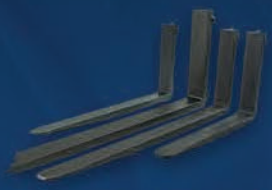

PALLET FORK TINES



BLADE KITS



BROOM WAFERS



WIRE HARNESSES

IN STOCK & READY TO SHIP

Two convenient ways to order at BDAPARTS.COM or SmartEquip

Blue Diamond® Attachments is a U.S.-based, family-owned manufacturer that specializes in high-performance attachments for compact equipment used in construction, agriculture, landscaping, and municipal operations. The company offers a full line of brush cutters and complementary attachments designed for skid steers, mini skid steers, excavators, and tractors.

Scan to request a quote

BLUE DIAMOND ATTACHMENTS

BUILT STRONG. ATTACHED FOR LIFE.

4512 Anderson Road | Knoxville, TN 37918
ph 888-376-7027 | fax 865-246-2007
info@bluediamondattachments.com

Scan to visit *bluediamondattachments.com*

© 2026 Blue Diamond® Attachments. All Rights Reserved. Revised 11/19/2026